570 Third Street, Lake Elsinore, CA 92530 | 1-888-264-1017 | americanfireproducts.com

Fire Pit Burner Kit

Electronic Ignition Installation and Operating Instructions

If you cannot read or understand these installation instructions, do not attempt to install or operate this appliance.

RECTANGLE

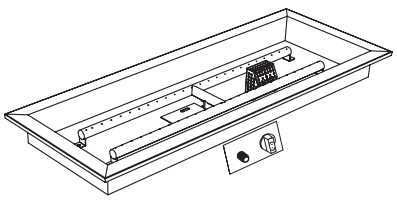

MODELS:

SS/OB-AFPP-18EIPS-LP
SS/OB-AFPP-24EIPS-LP
SS/OB-AFPP-30EIPS-LP
SS/OB-AFPP-36EIPS-LP
SS/OB-AFPP-48EIPS-LP

LINEAR

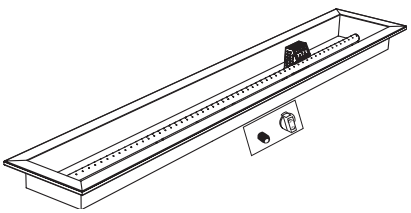

MODELS:

SS/OB-LCB-30EIPS-LP
SS/OB-LCB-36EIPS-LP
SS/OB-LCB-48EIPS-LP
SS/OB-LCB-60EIPS-LP
SS/OB-LCB-72EIPS-LP

ROUND

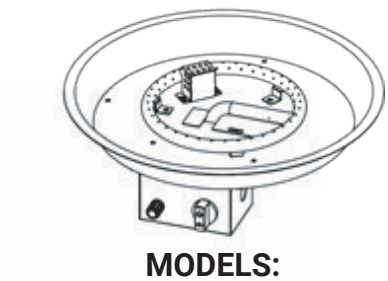

MODELS:

SS/OB-RSP-19EIPS-LP
SS/OB-RSP-25EIPS-LP

Installation Precaution

This fire pit requires a minimum 18 square inches of cross ventilation. Failure to provide proper ventilation can void the warranty.

Warning : For outdoor use only

Please retain this manual for future reference

AMERICAN FIRE PRODUCTS

Danger

Carbon Monoxide Hazzard

This appliance can produce carbon monoxide which has no odor.

Using it in an enclosed space can kill you.

Never use this appliance in an enclosed space such as a camper, tent, car, or home.

Danger

If you smell gas:

1) Shut off gas to appliance.
2) Extinguish any open flame.
3) If odor continues, keep away from the appliance and immediately call your gas supplier or fire department.

Warning

Do not store or use gasoline or other flammable vapors and liquids in the vicinity of this or other appliance.
An LP-cylinder not connected for use shall not be stored in the vicinity of this or any other appliance.

Warning

Do not leave unattended during use.
Do not use for cooking.
Follow all gas leak procedures in this manual prior to operation.

Warning

Improper installation, adjustment, alteration, service or maintenance can cause injury or property damage. Read the installation, operating, and maintenance instructions thoroughly before installing or servicing this equipment.

Warning: If the information in these instructions are not followed exactly, a fire or explosion may result causing property damage, personal injury, or death.

For Your Safety

Do not store or use gasoline or other flammable vapors and liquids in the vicinity of this or another appliance
*Do not use fire pit if any part has been under water. Immediately call a qualified service technician to inspect the appliance and to replace any part of the control system and any gas control that has been under water.

Specifications

Input Rate (Btu/hr):

Model No. BTU Rating

Part Number	LP/NG BTU
SS-AFPP-18EIPS-LP	65K
OB-AFPP-18EIPS-LP	65K
SS-AFPP-24EIPS-LP	65K
OB-AFPP-24EIPS-LP	65K
SS-AFPP-30EIPS-LP	65K
OB-AFPP-30EIPS-LP	65K
SS-AFPP-36EIPS-LP	65K
OB-AFPP-36EIPS-LP	65K
SS-AFPP-48EIPS-LP	145K
OB-AFPP-48EIPS-LP	95K
SS-LCB-30EIPS-LP	65K
OB-LCB-30EIPS-LP	65K
SS-LCB-36EIPS-LP	65K
OB-LCB-36EIPS-LP	65K
SS-LCB-48EIPS-LP	145K
OB-LCB-48EIPS-LP	95K
SS-LCB-60EIPS-LP	145K
OB-LCB-60EIPS-LP	95K
SS-LCB-72EIPS-LP	145K
OB-LCB-72EIPS-LP	95K
SS-RSP-19EIPS-LP	55K
OB-RSP-19EIPS-LP	55K
SS-RSP-25EIPS-LP	55K
OB-RSP-25EIPS-LP	55K

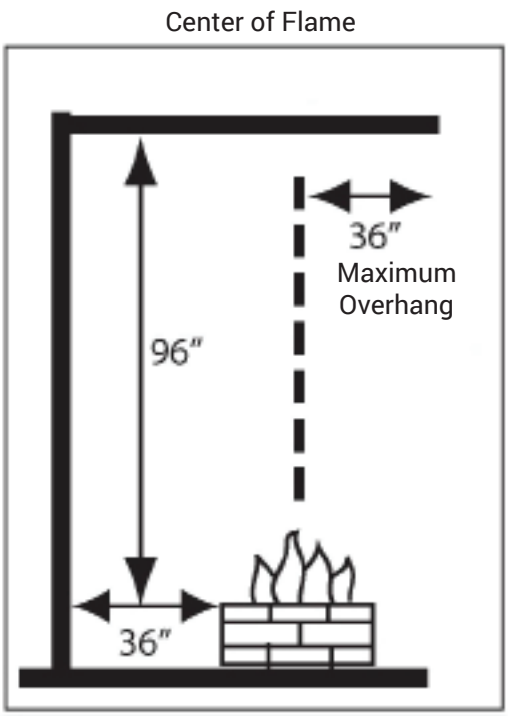

Figure 1. Clearance of Combustables

Gas	LP	NG
Rated Pressure	**11.0" WC**	**7.0" WC**

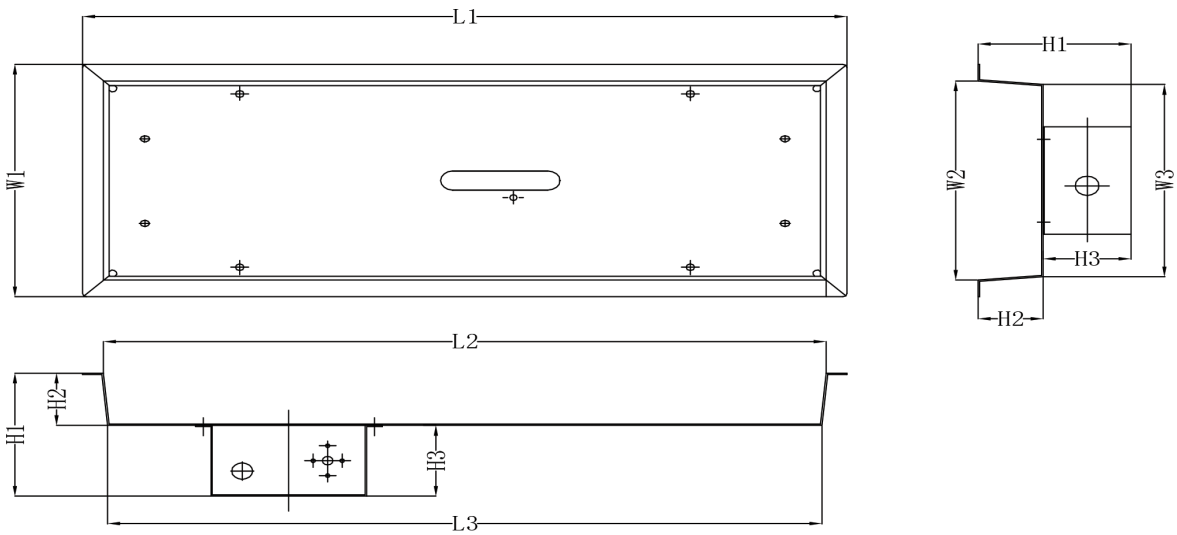

Fire Pit Pan

Fire Pit Pan Size and Embedded Panel			
L	L1	L2	L3
	X1	X2	X3
W	W1	W2	W3
	Y1	Y2	/
H	H1	H2	H3
	Z	/	/

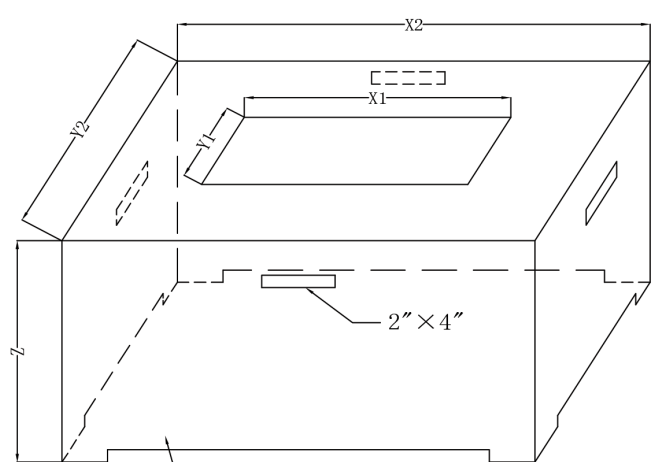

Embedded Panel

Burner	Dimension	Rectangle Burner Pan					Linear Burner Pan					Round Burner Pan	
L	**Pan Size**	**18″**	**24″**	**30″**	**36″**	**48″**	**30″**	**36″**	**48″**	**60″**	**72″**	**19″**	**25″**
	L1	20.5″	26.5″	32.5″	38.5″	50.5″	32.5″	26.5″	50.5″	62.5″	74.5″	21.73″	27.5″
	L2	18″	24″	30″	36″	48″	30″	24″	48″	60″	72″	18.94″	24.75″
	L3	18″	24″	30″	36″	48″	30″	24″	48″	60″	72″	18.55″	24.25″
W	**Pan Size**	**18″**	**24″**	**30″**	**36″**	**48″**	**30″**	**36″**	**48″**	**60″**	**72″**	**19″**	**25″**
	W1	8.5″	10.5″	12.5″	14.5″	16.5″	8.5″	8.5″	8.5″	8.5″	8.5″	/	/
	W2	6″	8″	10″	12″	14″	6″	6″	6″	6″	6″	/	/
	W3	6″	8″	10″	12″	14″	6″	6″	6″	6″	6″	/	/
H	**Pan Size**	**18″**	**24″**	**30″**	**36″**	**48″**	**30″**	**36″**	**48″**	**60″**	**72″**	**19″**	**25″**
	H1	6″	6″	6″	6″	6″	6″	6″	6″	6″	6″	6″	6″
	H2	2.5″	2.5″	2.5″	2.5″	2.5″	2.5″	2.5″	2.5″	2.5″	2.5″	2.5″	2.5″
	H3	3.5″	3.5″	3.5″	3.5″	3.5″	3.5″	3.5″	3.5″	3.5″	3.5″	3.5″	3.5″
X	**Panel Size**	**18″**	**24″**	**30″**	**36″**	**48″**	**30″**	**36″**	**48″**	**60″**	**72″**	**19″**	**25″**
	X1	19″	25″	31″	37″	49″	31″	37″	49″	61″	73″	22″	28.25″
	X2	25″	32.5″	40.5″	48″	64″	40.5″	48″	64″	78″	95″	42″	48″
Y	Y1	7″	9″	11″	13″	15″	7″	7″	7″	7″	7″	22″	28.5″
	Y2	18.5″	24″	29″	34″	39.5″	18.5″	18.5″	18.5″	18.5″	18.5″	42″	48″
Z	Z	24″	24″	24″	24″	24″	24″	24″	24″	24″	24″	24″	24″

NO.	Components	Specifications	Quantity
1	Burner Pan	18” / 24” / 30” / 36” / 48”	1
2	Burner	H-Burner	1
3	Ignitor Box	66*30*46	1
4	Burner Baffle	146*50	1
5	Orifice	5/8-18UNF	1
6	Bellows	5/8-18UNF	1
7	Ignition Needle	UL3573	1
8	Thermocouple	M8*1.0	1
9	Safety Valve	5/8-18UNF	1
10	Regulator	1/2 PSI	1
11	Ignition	Light Touch	1
12	Control Knob	40d	1
13	Control Box	SS	1
14	Screw	1/4”	1
15	Gas Tank Stand	SS	1
16	Screw	M8*50	1

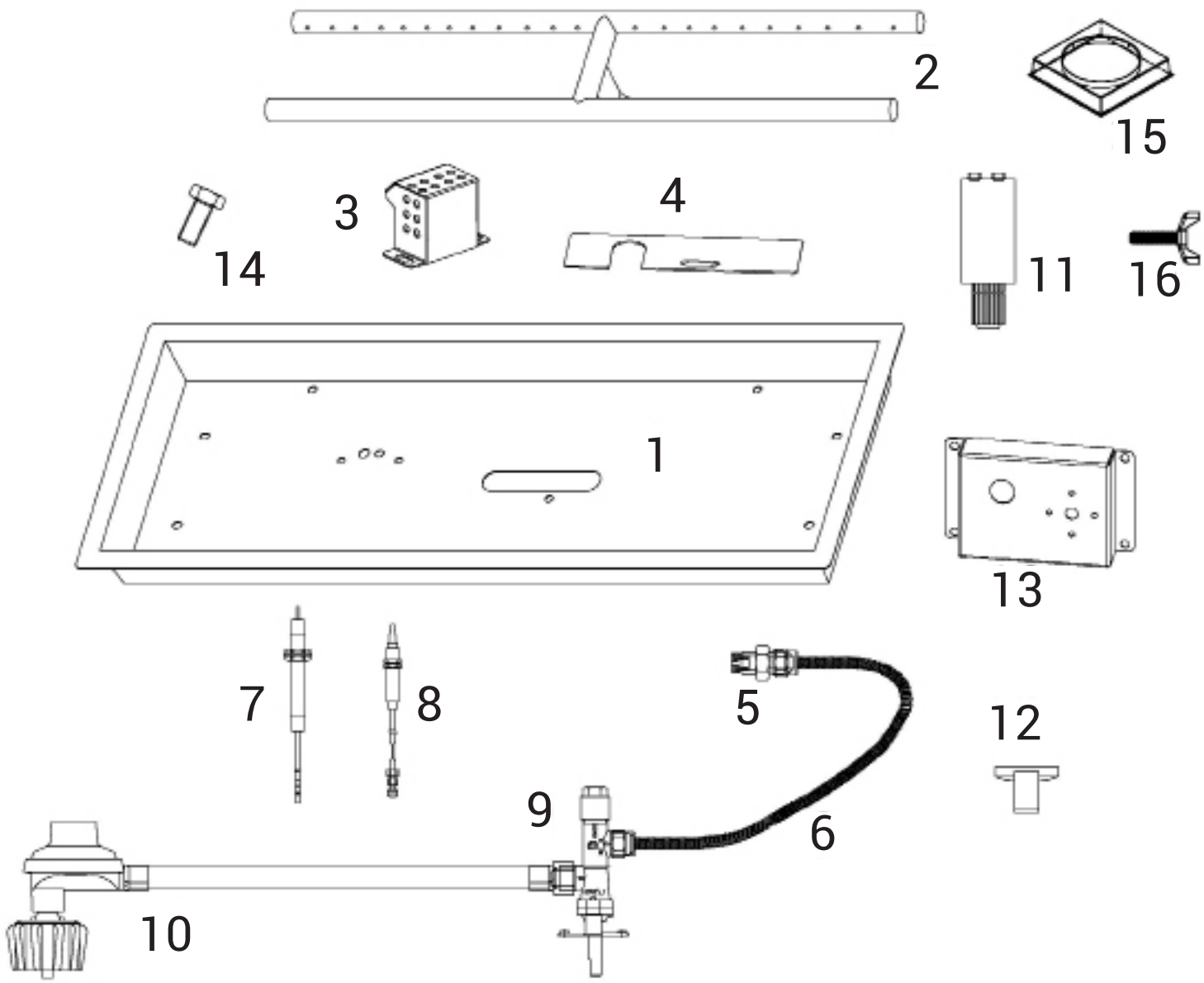

NO.	Components	Specifications	Quantity
1	Burner Pan	30” / 36” / 48” / 60” / 72”	1
2	Burner	Straight Tube Burner	1
3	Ignitor Box	66*30*46	1
4	Burner Baffle	146*50	1
5	Orifice	5/8-18UNF	1
6	Bellows	5/8-18UNF	1
7	Ignition Needle	UL3573	1
8	Thermocouple	M8*1.0	1
9	Safety Valve	5/8-18UNF	1
10	Regulator	1/2 PSI	1
11	Ignition	Light Touch	1
12	Control Knob	40d	1
13	Control Box	SS	1
14	Screw	1/4”	1
15	Gas Tank Stand	SS	1
16	Screw	M8*50	1

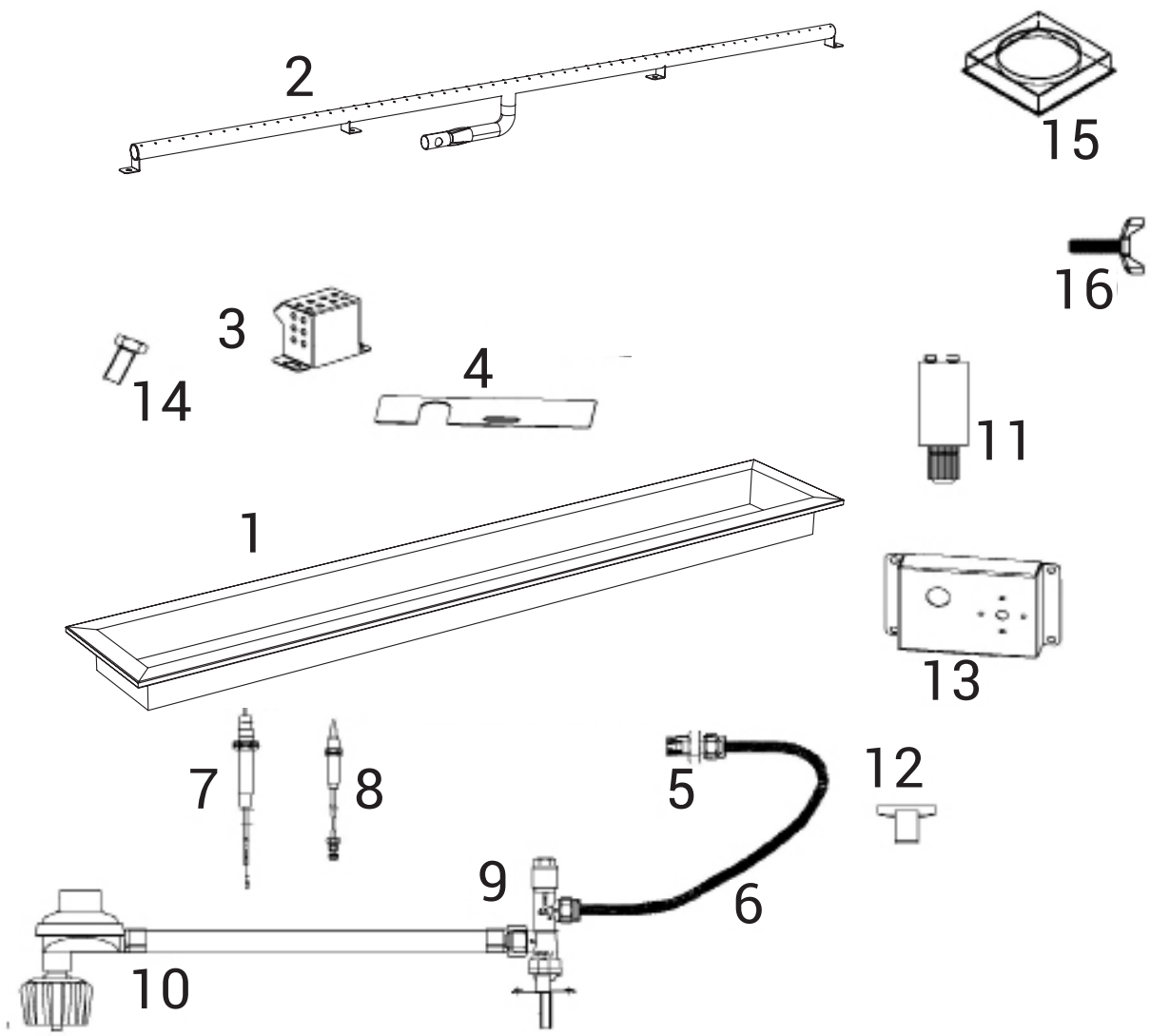

NO.	Components	Specifications	Quantity
1	Burner Pan	19” / 25”	1
2	Burner	13” Round	1
3	Ignitor Box	66*30*46	1
4	Burner Baffle	146*50	1
5	Orifice	5/8-18UNF	1
6	Bellows	5/8-18UNF	1
7	Ignition Needle	UL3573	1
8	Thermocouple	M8*1.0	1
9	Safety Valve	5/8-18UNF	1
10	Regulator	1/2 PSI	1
11	Ignition	Light Touch	1
12	Control Knob	40d	1
13	Control Box	SS	1
14	Screw	1/4”	1
15	Gas Tank Stand	SS	1
16	Screw	M8*50	1

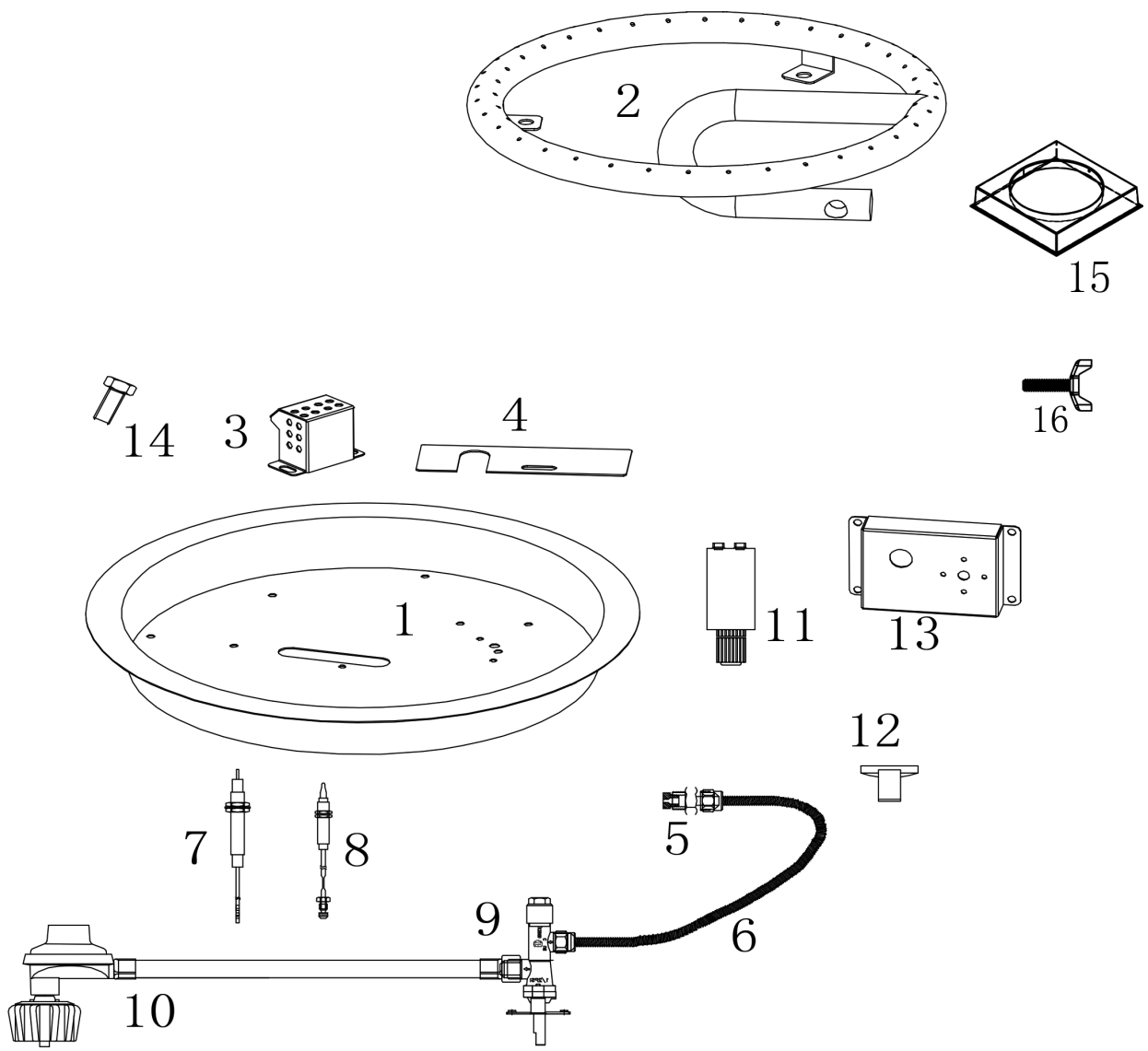

Installation Safety Guidelines

A. **Installation and repair should be done by a qualified service person. The appliance should be inspected before use and at least annually by a qualified service person. More frequent cleaning may be required as necessary.** It is imperative that control compartment, burners and circulating air passageways of the appliance be kept clean.

B. Carefully inspect for shipping damage. If any parts are damaged, call the dealer.

C. Correct installation and proper placement of the unit and decorative media is crucial to the safe performance of the unit. See installation instructions for further information.

D. Ensure that the unit is installed in such a manner that the vent opening at the base of the unit remains obstacle-free at all times and during all weather conditions.

E. **Due to high temperatures, the unit must be located out of traffic areas and away from combustibles.**

Operating The Unit Safely And Correctly

A. **This appliance is only intended for operation in temperatures above 32°F.**

B. When shutting the unit down—be sure to TURN THE CONTROL VALVE FULLY OFF.

C. Children MUST be carefully supervised when they are in the area of this appliance.

D. **DO NOT sit or place any part of the body, clothing, or other flammable materials on or near the unit surround.** Children and adults should be alerted to the hazard of high surface temperatures and should stay away to avoid burns or clothing ignition.

E. Every time you use the unit, make sure that:

1. **The area around the unit is clear and free from combustible materials, gasoline and other flammable vapors and liquids.**
2. **There is no blockage of the airflow** through the vent openings located on the bottom of the unit.
3. The hose is inspected (if applicable). See the SAFE USE & MAINTENANCE OF PROPANE-GAS CYLINDERS section.

F. **WARNING: HOT WHILE IN OPERATION AND FOLLOWING OPERATION.** Serious injury can occur! **DO NOT throw trash, paper, or other flammable materials onto the unit.** DO NOT leave in operation when unattended. **WARNING: DO NOT operate this unit in the rain.**

G. SOLID FUEL MUST NOT BE BURNED in the unit.

H. **DO NOT** continue using if you smell unusual odors, or have headaches, nausea, or dizziness.

I. **DO NOT store any combustible materials, gasoline, and any other flammable vapors/liquids in the vicinity** of the unit. Provide adequate clearance for servicing and operation.

J. **Matches, paper, garbage, or any other material must not be thrown onto the unit or into the flame.**

K. **DO NOT use the unit if any part of it has been underwater. Immediately call a qualified professional** service technician to inspect the set and to replace any part of the control system that has been underwater.

Safe Use & Maintenance Of Propane Gas Bottles

IMPORTANT FOR YOUR SAFETY
READ AND FOLLOW ALL WARNINGS PROVIDED WITH THE PROPANE-GAS CYLINDER.
When operating this appliance with a propane-gas cylinder, these instructions and warnings MUST be observed.
FAILURE TO DO SO MAY RESULT IN A SERIOUS FIRE OR EXPLOSION.

CYLINDER/CONNECTOR REQUIREMENTS

A. Propane-gas cylinders, valves, and hoses must be maintained in good condition and must be replaced if there's visible damage to either the cylinder or valve. If the hose is cut or shows excessive abrasion or wear, it must be replaced before using the gas appliance (see e.).

B. This unit,when used with a cylinder, should be connected to a standard 5-gallon (20lb.) propane-gas cylinder equipped with an OPD (Overfill Prevention Device). The OPD has been required on all cylinders sold since October 1, 1998, to prevent overfilling.

C. Cylinder dimensions should be approximately 12" (30.5 cm) in diameter and 18" (45.7 cm) high. Cylinders must be constructed and marked in accordance with the Specifications for Propane Gas Cylinders of the U.S. Department of Transportation (D.O.T.) or the National Standard of Canada CAN/CSA-B339, Cylinders, Spheres, and Tubes for Transportation of Dangerous Goods.

D. The cylinder used must include a collar to protect the cylinder valve, and the cylinder supply system must be arranged for vapor withdrawal.

E. The pressure regulator and hose assembly (Fig. 7-1) supplied with this outdoor-cooking gas appliance must be used. Original and replacement pressure regulator and hose assemblies must be those specified by the manufacturer for connection with a cylinder connecting device identified as Type I by the ANSIZ21.58-2005/CGA 1.6-2005(see PARTS LIST for ordering information).

F. The propane-gas cylinder valve must be equipped with a cylinder connection coupling device, described as Type I in the standard defined in paragraph e. above. This device is commonly described as an Acme thread quick coupler.

G. If the propane-gas cylinder comes with a dust plug, place the dust cap on the cylinder valve outlet whenever the cylinder is not in use.

QUICK COUPLER OPERATION

To connect the regulator/hose assembly to the propane-gas cylinder valve fitting: Press the hand nut on the regulator over the Acme thread fitting on the cylinder valve. Turn the hand nut clockwise to engage the threads and tighten until snug.

LEAK TEST

Turn on the gas supply, ignite the burner, and test at all connections for leaks using a soapy water solution. If bubbles appear, a leak is present. Turn off the gas and tighten at all connections. Repeat until no leaks are present. If a leak persists, turn off the gas supply and contact the local gas company or dealer. **NEVER USE A FLAME TO CHECK FOR LEAKS.**

The use of pliers or a wrench should not be necessary. Only cylinders marked "propane" may be used.
To disconnect: Turn the hand nut counterclockwise until detached (Fig. 7-1).

Important: Before using the unit, and after each time the cylinder is removed and reattached, check the hose for wear (see a.) and check all connections for leaks. Turn off the unit valves and open the main cylinder valve, then check connections with soapy water. Repair any leaks before lighting the unit.

CAUTION: Always turn the propane cylinder main valve off after each use, and before moving the unit and cylinder or disconnecting the coupling. This valve must remain closed and the cylinder disconnected while the appliance is not in use, even though the gas flow is stopped by a safety feature when the coupler is disconnected.

Carefully inspect the hose assembly each time before the gas is turned on. A cracked or frayed hose should be replaced immediately.

If the appliance is stored indoors, the cylinder must be disconnected and removed. Disconnected cylinders must be stored outdoors, out of the reach of children, with threaded valve plugs tightly installed, and must not be stored in a building, garage, or any other enclosed area.

FOR YOUR SAFETY

A. DO NOT store a spare propane-gas cylinder under or near this appliance.

B. NEVER fill the cylinder beyond 80-percent full.

C. IF THE INFORMATION IN A. AND B. IS NOT FOLLOWED EXACTLY, A FIRE CAUSING DEATH OR SERIOUS INJURY MAY OCCUR.

Fig. 7-1 Type 1 Acme Thread Quick Coupler

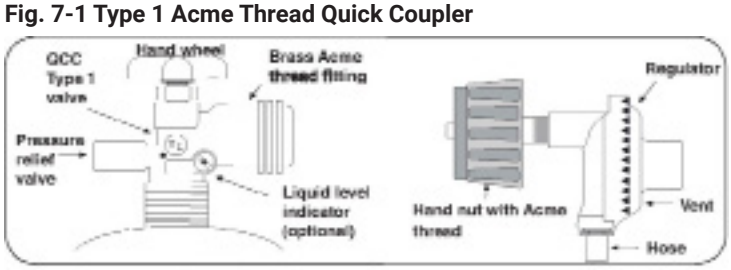

Use LP propane gas tanks only with these required mesurements: 12in.(diameter) x 18in.(tall) with 20 lb capacity maximum.

Glass Crystals Installation Guidelines

A. Carefully inspect the carton for shipping damage. If any parts are missing or damaged, call your dealer. **Do not attempt** to install the appliance unless all parts are in good condition.

B. Correct installation is crucial to safe performance of your Outdoor Fire Pit.

C. Due to high temperatures, the Fire Pit must be located out of traffic areas and away from combustibles.

Glass Requirement

Replacement parts available from your local retailer

RECTANGLE	
Part Number	Glass (lbs)
SS/OB-AFPP-18EIPS-LP	15
SS/OB-AFPP-24EIPS-LP	25
SS/OB-AFPP-30EIPS-LP	40
SS/OB-AFPP-36EIPS-LP	60
SS/OB-AFPP-48EIPS-LP	95

LINEAR	
Part Number	Glass (lbs)
SS/OB-LCB-30EIPS-LP	25
SS/OB-LCB-36EIPS-LP	35
SS/OB-LCB-48EIPS-LP	40
SS/OB-LCB-60EIPS-LP	50
SS/OB-LCB-72EIPS-LP	60

ROUND	
Part Number	Glass (lbs)
SS/OB-RSP-19EIPS-LP	30
SS/OB-RSP-25EIPS-LP	50

Glass Crystal Placement

CAUTION - Cuts may occur from the sharp edges on glass. Use safety gloves during the placement of glass.

Pour the bag of glass crystals into the Outdoor Fire Pit so that the burner is completely covered. (See figures #1 and #2). These instructions apply to round, rectangular, and linear burners.

Figure 1

Top View

Figure 2

CAUTION: BURN HAZARD. GLASS CRYSTALS WILL REMAIN HOT FOR SOME TIME AFTER USE. YOU MUST MAINTAIN THE LAYOUT AS SHOWN TO ENSURE PROPER OPERATION OF YOUR FIRE PIT. IF YOU NEED TO REPOSITION ANY MATERIAL TO MAINTAIN THE PROPER LAYOUT, USE HEAT RESISTANT GLOVES OR ALLOW MATERIAL ADEQUATE TIME TO COOL BEFORE HANDLING.

Converting To A Different Gas Type

To convert propane to natural gas or from natural to propane gas, carefully follow the steps below:

SHUT OFF THE GAS SUPPLY TO THE UNIT AND ANY NEARBY ELECTRICAL SOURCES OR APPLIANCES.

1. If present, remove all decorative media from the unit.
2. Remove the screws attaching the burner pan to your enclosure
3. Carefully detach the flex connector attached to the orifice holder (see Fig. 1) and unscrew the orifice holder from the burner pipe (see Fig. 2).
4. Remove the orifice from the holder (see Fig. 2) and replace with the proper-sized one for your gas requirement. Propane gas requires a 2.30 mm (drill size) orifice. Natural gas requires a 3.78 mm (drill size) orifice.

Note: If you are converting to and using natural gas you MUST install the air shutter over burner pipe to cover the air holes (see Fig. 5). For propane (L.P.) gas, remove the air shutter.

Replace the orifice holder and reattach the connector from the valve (see Fig. 1).

5. Remove the propane hose and regulator from the inlet side of the on/off gas valve (Figure 3) (do not discard). Install 3/8" connecter hose, (not included) to inlet side (Figure 6)
6. Note: Prior to completing the installation, attach supplied sticker (with Natural Gas information) to the rating plate showing that the conversion was completed.
7. Install your burner system and connect to your gas supply, check for leaks per the INSTALLATION section. When no leaks are detected, complete the installation process.

Figure 1

Connector from valve attached to orifice holder on burner pipe. Detach connector from orifice holder when changing to different gas type.

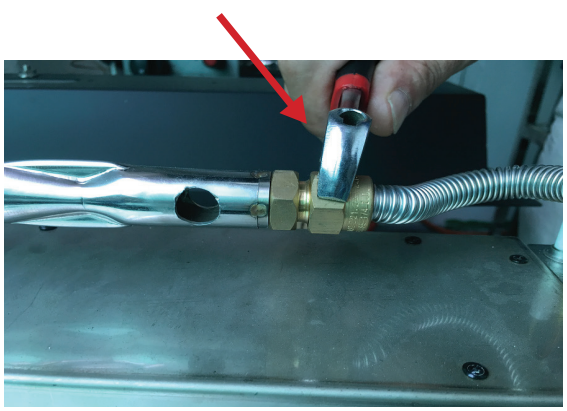

Figure 2

Orifice Holder

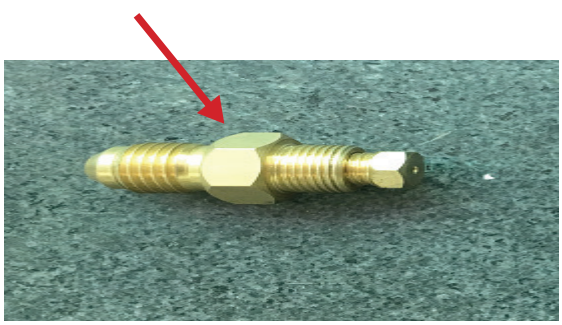

Converting To A Different Gas Type (continued)

Figure 3

Disconnect propane hose and regulator (do not discard)

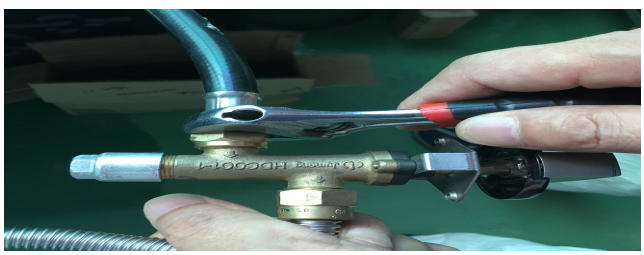

Figure 4

Natural Gas Orifice and Natural Gas Air Shutter (Included)

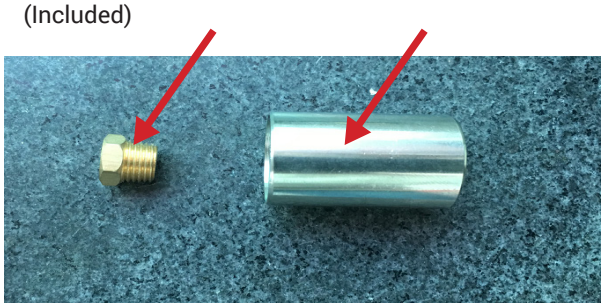

Figure 5

Orifice
(Remove to change to a different gas type)
2.30mm-propane
3.78mm-natural gas

Air shutter (Used only with natural gas. Removed for propane gas.)

Burner Tube

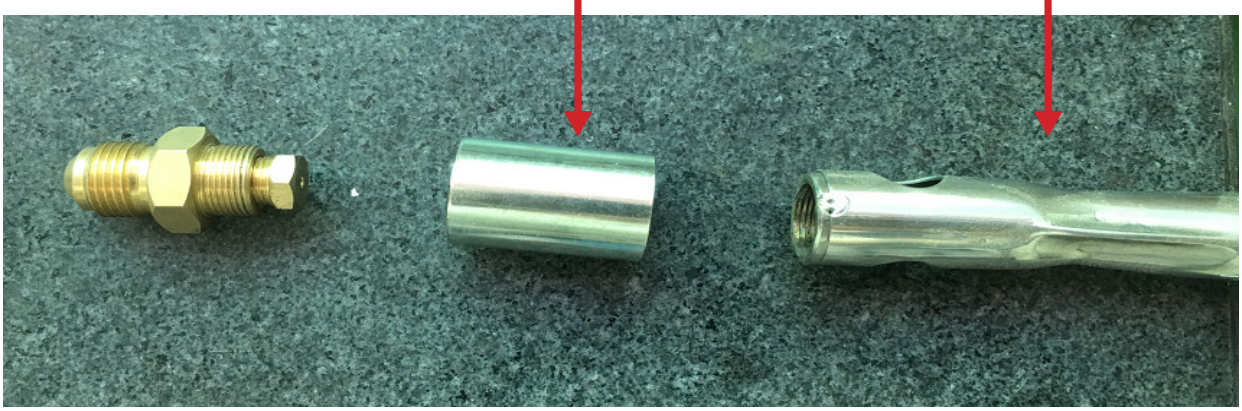

Figure 6

Re-connect 3/8" Natural Gas hose and regulator (not included)

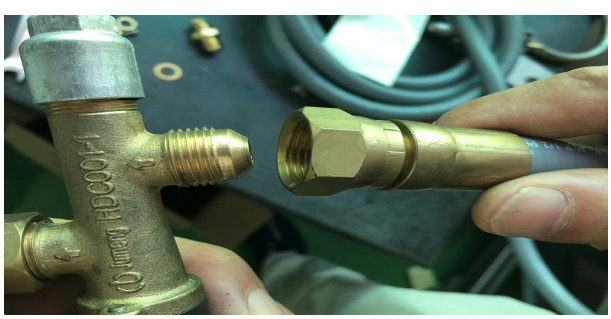

Operating The Unit - Lighting And Extinguishing

For your safety, read before lighting

WARNING: IF YOU DO NOT FOLLOW THESE INSTRUCTIONS EXACTLY, A FIRE OR EXPLOSION MAY RESULT, CAUSING PROPERTY DAMAGE, PERSONAL INJURY, OR LOSS OF LIFE.

A. BEFORE LIGHTING, smell all around the unit **area for gas. Be sure to smell next to the floor,** because some gas is heavier than air and will settle on the floor.

B. WHAT TO DO IF YOU SMELL GAS

1. Shut off the gas to the appliance.
2. **Extinguish any open flame.**
3. If odor continues, immediately call your gas supplier or the fire department.

C. Use only your hand to push in or turn the gas control knob. Never use tools. If the knob will not push in or turn by hand, DO NOT try to repair it. **Call a qualified professional service technician. Force or attempted repair may result in fire or explosion.**

Electronic Ignition Lighting Instructions

1. **STOP!** Read the safety information above.
2. **Push and slowly turn the control knob to the HIGH position.** (See P1)
3. Hold ignitor to light the pilot, release control knob after 45 seconds. (see P1)
4. Observe the flame height when lit. Flame should be 3 to 13 inches high. (see P2)
5. If the burner does not light, immediately turn the control knob to the OFF position.
6. Wait approximately five minutes to clear out any gas, and repeat steps 1-4 above.
7. If your burner fails to light again, turn the control knob to the OFF position and contact your dealer or gas supplier.
8. To extinguish your gas burner, turn the control knob to the OFF position. Be sure the control knob is turned fully off to avoid any gas leakage.

P1

P2

Pictorial representation of approximate flame height

Installation Of Fire Pit Into An Approved Enclosure

REQUIREMENTS

1. Only non-combustible materials should come in direct contact with any part of the Fire Pit. Underneath area should be non-combustible as well.
2. Only use ¾" gas supply line to the Fire Pit. Based on the selection of the fire pit size, the proper brass fittings should be used to ensure a proper installation.
3. Determine the size of the rectangle or linear Fire Pit you are preparing to install (Refer to page 3).
4. You must provide a rectangle or linear cut out to place the fire pit into the non-combustible enclosure surround. Use the pattern from the shipping carton for sizing.
5. Follow the local code requirements for the gas type being used. This Fire Pit should be installed in accordance with local codes and ordinances or in the absence of local codes, with the latest National Fuel Gas Code, ANSI Z223.1 NFPA54 or CSAB149.1, Natural and Propane Installation Code in Canada.
6. Fire Pits create high temperatures, it is very important to have any combustibles at a safe distance.
7. Normal operation of the Fire Pit is with a battery box that is supplied with your system (Fig 4). The battery box has 12-feet of black sleeved wire that is to be passed through the junction box provided. This wire should not be cut or spliced and the junction box can be placed in the facing of the vertical finish of the fire pit, if you place the wire under ground you should install those wires into an approved protective conduit/sleeve material.
8. If (optional) 120VAC adapter (Pg.13) is going to be used to power this system it is required to follow all local codes or National Electrical Code ANSI/NFPA 70 for installation of this electrical outlet. A breaker on wall switch with approved out door outlet must be used to insure safety to this Fire Pit. When not in use the breaker should be in the OFF position.
9. Fire pit should never be left unattended while in operation. It should always be a safe distance from all trees and combustible landscape materials.
10. Construction of the finished fire pit should be stable and solid. From the bottom of the control box that houses the gas valve and module, it should be a minimum if of 4-inches to the ground level. See figure #1. Drainage is critical to ensure that water does not damage and valve components. Never install the fire ring system below grade.
11. **CAUTION: A minimum of 18 square inches of cross ventilation (2 sides) is required to keep the components in good working order.**
12. The insulation square pad provided with the Fire Pit is to be placed foil up toward the bottom of pan on top of the valve box.
13. Never fill the cavity under and around the valve box with any material, this is a provided air space necessary for ventilation.
14. These products are designed for outdoor use only. Not approved for any indoor use.
15. This Fire Pit is designed to have decorative rock, Lava rock/Media covering the burner. Decorative Rock is not provided. When purchasing decorative rock it is recommended to use minimum of 1-inch diameter rock as a base to fill the burner pan. Decorative glass covering may be loosely scattered on top of rock if desired. **NOTE:** If using all glass media, glass must be a minimum of 1/4-inch diameter or larger.
16. Gas lines and fittings must be installed in to the non-combustible structure. All gas connections must be leak tested before installation of the fire pit. Soapy water leak detection is required before regular use of the fire pit.
17. Do not use material that will absorb moisture overtime and will not release this moisture quickly. Moisture can boil in this material and can rapidly break apart and cause damage or personal injury.
18. Never leave any other combustible material on top of the fire pit. This could cause unsafe operation of this system and damage to the component that will not be covered under our warranty.
19. Cover the complete burner with lava or decorative Rock material (min. 1-inch diameter). Completely cover the burner, no more than 1 inch above the burner.

Warning

***Do not use this fire pit for cooking.**
*Do not burn any other materials than are supplied with and intended for use in this fire pit.
*Do not pour water into fire pit.
*The installation of this product must conform with local codes.
*Do not use this fire pit if any part has been under water.
*Do not store a spare or disconnected liquid propane cylinder under or near this fire pit.
*After a period of storage, and/or non use, the propane fire pit should be checked for gas leaks and burner obstmctions before use.
*Do not operate the propane fire pit if there is a gas leak present.
*Never use a flame to check for gas leaks.
*Combustible materials should never be within 10 feet of the top, back or sides of your propane fire pit.
*Do not put any other fire pit cover or anything flammable on, or beneath the fire pit.
*The fire pit should never be used by children. Children must be supervised when they are anywhere near the appliance.
*Users should be alerted to the hazards of high surface temperatures and keep a safe distance to avoid burning or clothing ignition.
*Pay attention when operating the fire pit. It is hot in use and should never be left unattended. Do not transfer it while in operation.
*Should fire go out while burning, turn the gas valve off. Follow the instruction and wait five minutes before attempting to relight.
*Never use charcoal or any other solid fuel in the fire pit. Never parch clothing or other flammable materials on or near the fire pit.
*Never lean over the open fire pit or place hands or fingers on the upper portion of an operational unit.
*Keep ventilation openings in cylinder enclosure (FIRE PIT BODY) free and clear of debris.
*Do not rest feet on the fire pit.
*Please take out the battety when not using the fire pit for an extended length of time.
*Do not enlarge valve orifices or burner ports when cleaning the valve or burner.
*Cylinder supply system must be arranged for vapor withdrawal.
*LP Tank used must include a collar to protect the cylinder valve.
*Never fill the cylinder beyond 80% full.
*Liquid propane gas is not natural gas.
*The conversion or attempted use of natural gas in a liquid propane unit or liquid propane gas in a natural gas unit is dangerous.
*Do not use this fire pit on vehicles or boats. Always operate the appliance on flat ground outdoors.
*Keep any electrical supply cord and the fuel supply hose away from any heated surfaces.
*Do not use this fire pit unless all parts are in place.
*Keep the appliance area clear and free from combustible materials, gasoline, and other flammable vapors and liquids.
Inspect the hose before each use of the appliance.
*The hose assembly must be replaced prior to the appliance being put into operation if there is evidence of excessive abrasion or wear or if the hose is damaged.
*If the pvc component is damaged, please send email to supplier: info@americanfireglass.com.
*Locating the hose out of pathways where people may trip over it or in areas where the hose may be subject to accidental damage.
*The burner must be replaced prior to the appliance being put into operation if it is evident that the burner is damaged.
*If the burner component is damaged, please send email to supplier: info@americanfireglass.com.

The LP-gas supply cylinder to be used must be:

1) Constructed and marked in accordance with the U.S. Department of Transportation(D.O.T.) Specifications for LP-Gas Cylinders, or the Standard for Cylinders, Spheres and Tubes for Transportation of Dangerous Goods and Commission, CAN/CSA-B339, as applicable;
2) Provided with a listed overfilling prevention device; and
3) Provided with a cylinder connection device compatible with the connection for the appliance.

Liquid Propane Gas Units

* Do not attempt to disconnect the gas regulator or any gas fitting while your fire pit is in operation.
* A dented or rusty liquid propane cylinder may be hazardous and should be checked by your gas supplier prior to use.
* Do not use a liquid propane cylinder with a damaged valve and any other worn out parts.
* Transport and store the empty gas cylinders carefully and properly.
* If you see, smell or hear the hiss of escaping gas from the liquid propane cylinder:
    1. Turn off the gas supply and get away from the gas cylinder and the fire pit at once.
    2. Do not attempt to correct the problem yourself.
    3. Get to your gas supplier and/or the fire department for help.

Warning

This screen must be clear and free of obstructions at all times to insure proper operation.

Screen

DO NOT PLACE LAVA ROCKS ON THE SCREEN. KEEP SCREEN CLEAR.

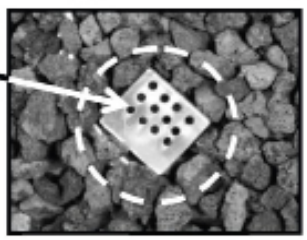

Operation

CAUTION: Children and adults should be alerted to the hazards on high surface temperatures and should stay away to avoid burns or clothing ignition. Young children should be carefully supervised when they are in the area of the appliance.

WARNING: Do not use this appliance if any part has been underwater. Immediately call a qualified service technician to inspect the appliance and to replace any part of control system and any gas control, which has been underwater.

SAFETY WARNINGS

1. Never leave the Fire Pit unattended during operation.
2. Clothing or other flammable materials should not be placed on or near the appliance.
3. Any guard or other protective device removed for servicing the appliance must be replaced prior to operating the appliance.
4. Installation and repair should be done by a qualified service person. The appliance should be inspected before use and at least annually by a qualified service person. More frequent cleaning may be required as necessary. It is imperative the control compartment, burners and circulating air passageways of the appliance be kept clean.
5. Inspect the fuel supply connection before each use of the appliance.
6. Temporary storage of this appliance indoors is permissible only if it has been disconnected from its fuel supply (Natural or L.P. gas line).

WARNING

1. This appliance is hot when operated and can cause sever burns.
2. Do not burn any solid fuels in this appliance.

INITIAL START UP

1. Turn gas ON. Ensure you have leak tested the fire pit before operating.
2. When using the standard battery pack, ensure batteries are installed and the Fire Pit is ready to operate.
3. Press ignitor button. You will hear the ignitor probe sparking, light the gas and fire pit will come on. **WARNING:** Do not stand over Fire Pit during ignition or operation due to high surface temperatures.

The distance between fireplace built-in stage and LP cylinder must be over 60”. (as the picture shows)

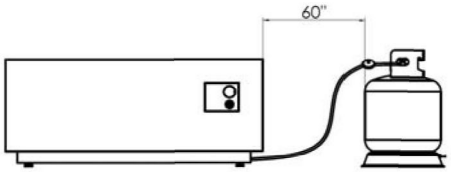

Put the gas tank in the metal stand. Make sure the gas tank sits on the metal stand completely. Turn the wing screw on the outer part of the metal stand clockwise to ensure the gas tank

Maintenance

WARNING: Any guard or protective device removed for servicing must be replaced prior to operating the fire pit.

WARNING: Installation and repair should be done by a qualified service person. Fire pits should be inspected prior to use and at least annually by a qualified sendee person.

WARNING: Ensure gas and power (if applicable) are shut off and fire pit is cool before servicing.

Keep fire pit covered at all times when not in use.

Keep any debris out of fire pit. Clean as needed.

Ring Cleaning: (1 x YR) If flames exhibit any abnormal shapes or behavior, or if burner fails to ignite properly, then the Burner holes may require cleaning. The appliance can be cleaned by carefully removing the logs and media to allow access to burner. Use a brush to carefully remove dust, spider webs, and loose particles from base, logs, and fire ring itself. If evidence of damage, fire ring must be replaced with fire ring specified by manufacturer.

Ignition Battery: For changing, simply unscrew cap, replace battery, and tighten cap.

Troubleshooting

Below are some potential causes and countermeasures to the symptoms indicated in bold. Please contact your retailer or certified technician for sendee & repair.

Will Not Light	
1. Air in gas line	If new install, may take several attempts to purge air
2. Debris in gas lin	Confirm gas line is clear (insulation, dirt, plastic, excessive pipe sealer etc)
3. Gas Pressure Improper	Confirm proper gas pressure found (Section 1)
4. Spark Igniter needs adjusted	Spark Igniter must be correctly aligned with burner holes.
5. Weak Batteries	Replace batteries.
6. Wire is shorted	Re-route wire away from conductive materials.
Will Not Stay Lit	Confirm proper gas pressure found (Section 1)
1. Gas Pressure Improper	Review Media in (Section 5)
2. Improperly applied media noise	Change Flex line routing.
3. Whistling Sound	

Limited Warranty

American Fire Products company warranties components in fire pits against manufacturing defects that prevent safe and correct function as follows:

• Electronics, Gas Valve, & Pilot Assembly: 1 yr. • Stainless Steel Pan, Fire Ring, & Valve Box: 5yrs.